TOA

MIXER FRAME

V-1000B

■DESCRIPTION

The V-1000B mixer frame can accommodate up to ten input modules.

■SPECIFICATIONS

Input Capacity	Space for 10 modules maximum
Color	Black
Dimensions	433.5 (W) × 143 (H) × 204 (D) mm
Weight	3.62 kg

■APPEARANCE

Rear View

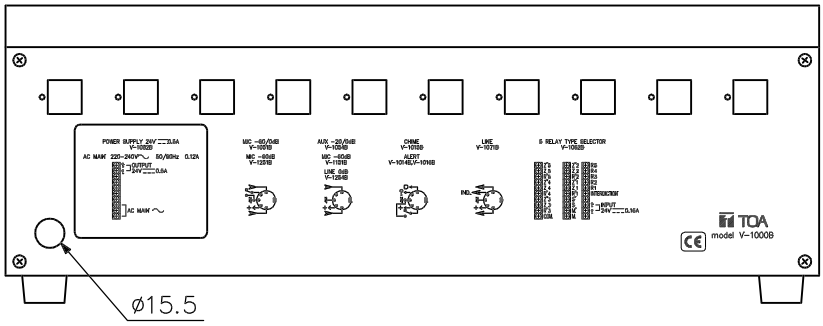

Front View

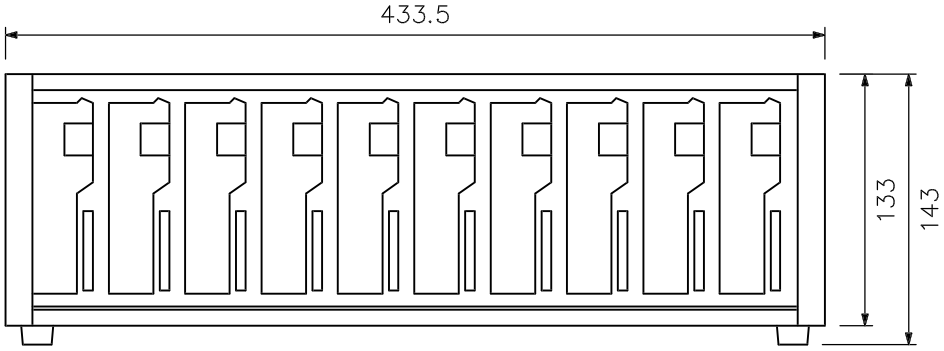

Side View

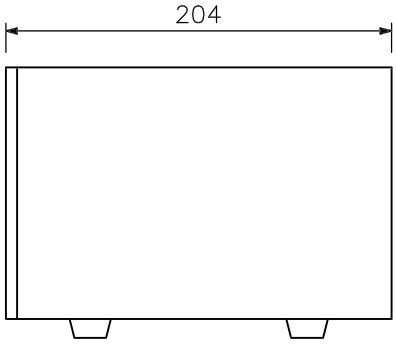

BUS LINES

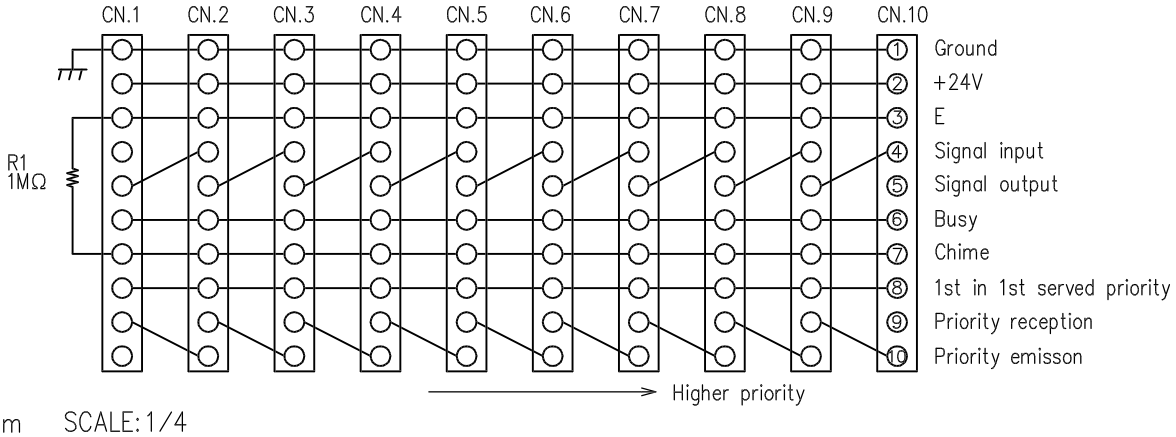

UNIT: mm SCALE: 1/4

TOA Corporation

DWG No: GV-01NA1-1